DIMENSIONAL DRAWING:TPC-DCM170

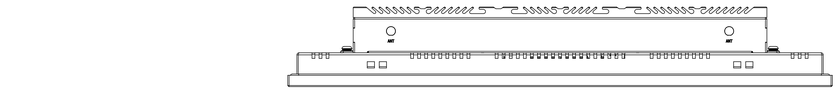

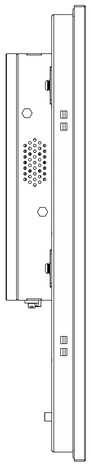

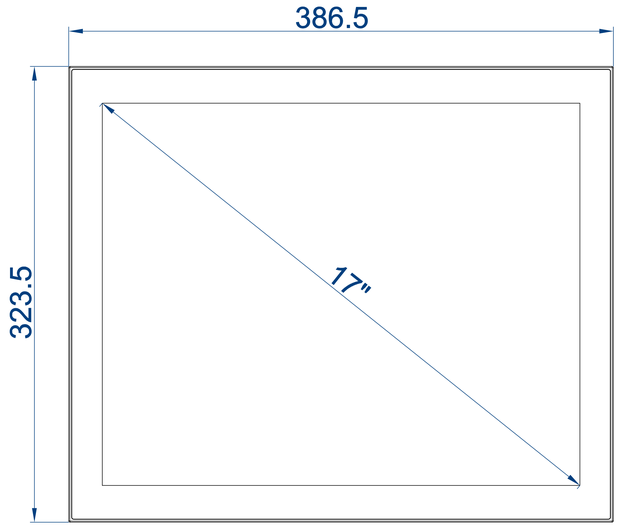

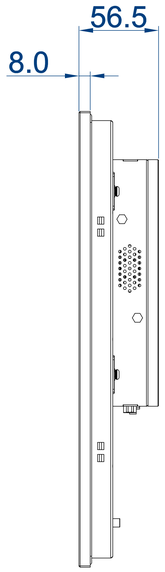

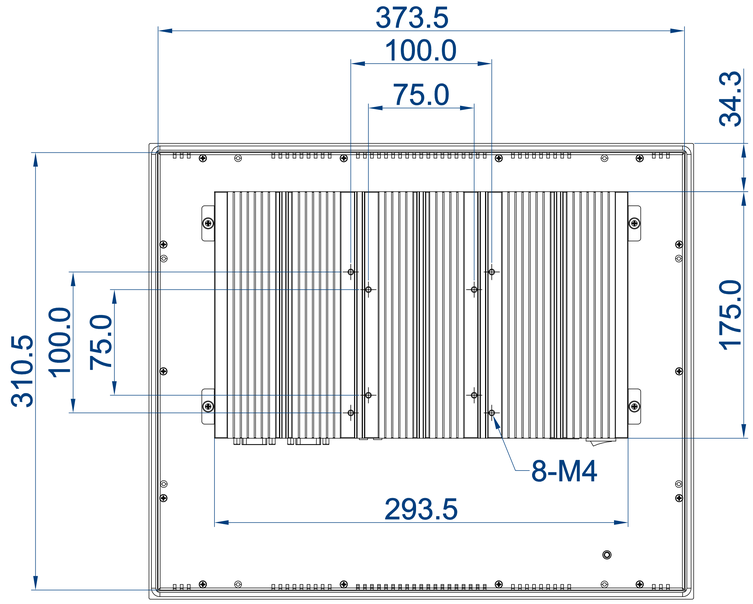

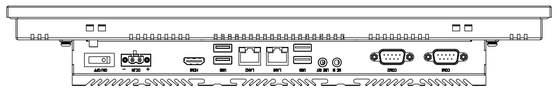

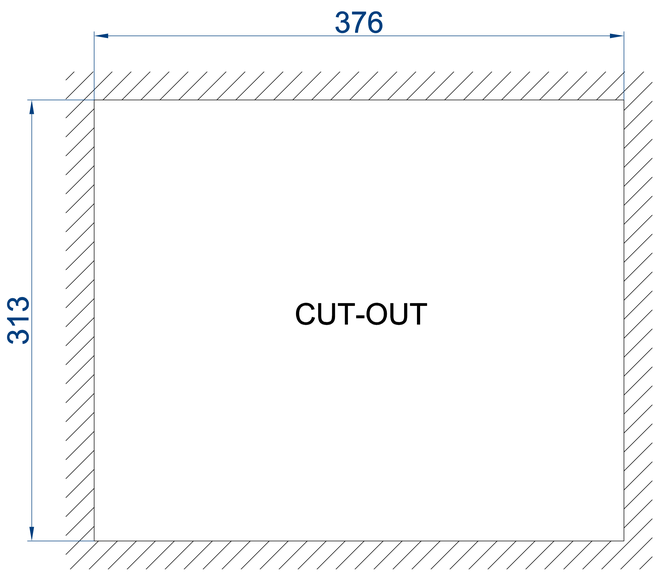

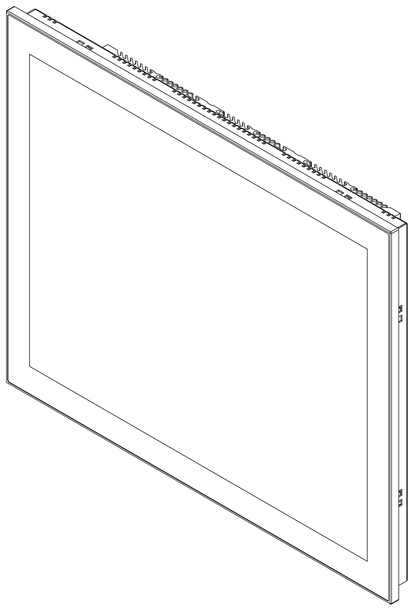

DIMENSIONS IN MILLIMETERS

TAICENN

DATE:2019.06.11

REV:A | Unit:mm